DESIGNER COLLECTION

RACHAEL
6636

SIZE
66" L x 36"W x 20"D

WATER CAPACITY
80 Gallons

WEIGHT
100-140 Pounds

INSTALLATION
Drop-in

BACK SLOPE
28°

MATERIAL
Acrylic

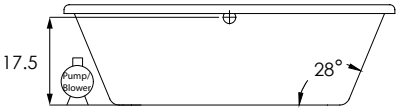

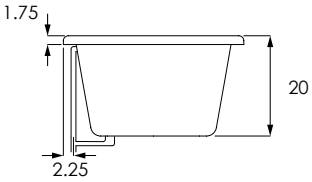

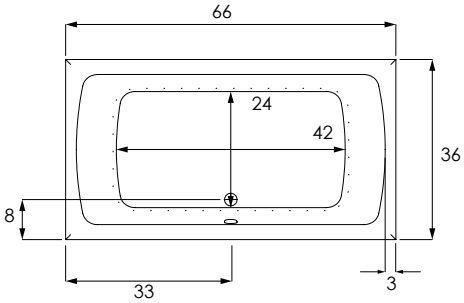

MODEL	
RAC6636ATO	Tub Only
RAC6636AWP	Whirlpool (6)
RAC6636ATA	Thermal Air
RAC6636ACO	Combo System
COLORS	
Standard	White | Biscuit | Bone
Premium Colors	Black | Sterling Silver
FINISH	
Matte Finish	MAT (must specify if desired)
Polished Finish	STANDARD
BACK MASSEUSE SYSTEMS	
System I - Manual Control (WP/CO)	BAC.MA1-XXX
System II - Electronic Control (WP/CO)	BAC.MA2-XXX
System III - Electronic Control (TA)	BAC.MA3-XXX
COLD PLUNGE | order form	CLD.PL
EXPORT CRATE	FRT.EXPCRT
EXTRA HIGH DENSITY	HI.DEN
GRAB BARS (Pair) Refer to price book for all available finishes	
Standard Grab Bars	GRA.BAR-XXX
Universal Grab Bars	UGB.BAR-XXX

MODEL	
HEATED BACKREST	INCLUDED ON THERMAL AIR
HYDRO BLANKET 2 Zones | 3 Zones | 4 Zones | 5 Zones (W/ 2 Controls)	BLA.HEA-X
HYDRO COAT	HYC.COA
HYDRO EXPRESS	69.104-HYD.EXP
HYDRO FILL (must specify location)	HYD.FIL
HYDRO FUSION	
Hydro Fusion (Tub Only)	29.102
Hydro Fusion w/ Ozone (Tub Only)	29.103
Hydro Fusion (TA, Whirlpool, Combo)	29.107
HYDRO INDULGE	HYD.IND
HYDRO OZONE UV COMBO SYSTEM	OZUV.XXX
Whirlpool and Combo Systems only	110 V | OZUV.110
INLINE HEATER Whirlpool and Combo Systems only	
No dedicated GFI required for 6 amp models	
12.50 Amps 1.5 KW - 110V	27.100
6.00 Amps 0.75 KW	27.103

HYDRO SYSTEMS
MADE IN THE U.S.A.

Headquarters
29132 Avenue Paine
Valencia, CA 91355

Manufacturing Facility
385 Highway 155 South
McDonough, GA 30253

Technical Support
support@hydrosystem.com

Orders Department
orders@hydrosystem.com

General Information
info@hydrosystem.com

Phone: 661-775-0686

Website: hydrosystem.com

CODES AND COMPLIANCES
Massachusetts code File no: P1-0614-491

ADA Compliant

All specifications and options subject to change without notice please contact a hydro systems representative for more information.

DESIGNER COLLECTION

RACHAEL
6636

DESCRIPTION	
JETS Installed per jet price for extra jets added to standard system price. All metallic finishes come with colored eyeball.	
Additional Standard or Swirling Jet Color Trim Group 1 - PC or PB Group 2 - AB, BB, SB, BC, SC, PN, SN, BN Group 3 - PG, BG, SG	JET.STD-XX | JET.SWI-XX
Swirling Jet Upgrade (Per jet substitution price added to standard system price)	JUP.SWI-XX
Micro Therapy Jet BIS, BLA, BON, SIL, WHI	MTJ.XXX
Custom Jet Locations (Must include drawing of locations)	69.116-CUS.JET
JET PLATING Clear / Brass / Chrome. Trim kit covers jet escutcheons, suction, and electronic softtouch pad. Per jet substitution price added to standard system price. All metallic finishes come with colored eyeball.	
Group 1 (PC or PB)	
6 Jets	PLA.06-XX
8 Jets	PLA.08-XX
10 Jets	PLA.10-XX
Group 2 (AB, BB,SB, BC,SC,PN,SN,BN)	
6 Jets	PLA.06-XX
8 Jets	PLA.08-XX
10 Jets	PLA.10-XX
Group 2 (PG, BG)	
6 Jets	PLA.06-XX
8 Jets	PLA.08-XX
10 Jets	PLA.10-XX
LED TEMP. READOUT KEYPAD Upgrade only, must have a keypad controlled system to purchase.	LED.UPG
LIGHTING LED Bath Light Chromatherapy System	LIG.LED
LOW WATER PROTECTION Includes 30 minute timer (110V)	LOW.WAT-110
MICROMOUNT Micromount requires increase in framing height by approximately 1¼"	69.140MCREDG
MOLDED ARMRESTS Some molded armrests add an interior detail line to the bathtub 2 Armrests (one pair) 4 Armrests (two pairs)	ARM.MOL-2 ARM.MOL-4
NECK MASSEUSE JET PILLOW Available in black, bone and white.	PIL.NEC-XX

DESCRIPTION	
PADDED HEADREST PILLOW Black only	41.128
PUMPS Custom Pump Locations	69.116-CUS.PMP
REMOTE CONTROL Must must have system to purchase	REM.CON
SKIRTS	
Integral Skirt No access panel on Tub Only models.	
Gel Coat	SKI.XXG-XXX
Acrylic (Standard Colors)	SKI.XXA-XXX
Acrylic (Premium Colors)	SKI.XXA-XXX
Molded Skirt Panels Additional lead time required; check with factory. Make sure to order a molded flange, if necessary.	
Seamed	
1 sided*	See Zen Skirt
2 sided*	SKI.SMD-2
3 sided*	SKI.SMD-3
4 sided*	SKI.SMD-4
Seamless	
1 sided*	SKI.SML-1
2 sided*	SKI.SML-2
3 sided*	SKI.SML-3
4 sided*	SKI.SML-4
*Specify which sides on worksheet.	
Floating Skirt Option for seamless skirt only	SKI.FLO-SML1 SKI.FLO-SML2 SKI.FLO-SMLX
Zen Skirt Factory installed. No access panel.	SKI.ZEN-XX
Tile Flanges	FLA.MO-X
Undermount	UNDRMT
WASTE & OVERFLOW Cable W/O No Charge (WHI, BIS, PC, PB, PN, BC, BB, BN, SC, SB, SN, ORB, PE)	WOV.XX
Cable W/O - Gold Finish Upgrade (PG, BG)	
INTEGRAL W/O (Std. round) Waste and overflow manufactured as part of the bath. Comes standard as a round overflow cover. Drain will be a tip-toe style and drain outlet will be a direct drain.	IWO.XX
LINEAR INTEGRAL W/O Waste and overflow manufactured as part of the bath. Drain will be a tip-toe style and drain outlet will be a direct drain.	LWO-XXX

HYDRO SYSTEMS
MADE IN THE U.S.A.

Headquarters
29132 Avenue Paine
Valencia, CA 91355

Manufacturing Facility
385 Highway 155 South
McDonough, GA 30253

Technical Support
support@hydrosystem.com

Orders Department
orders@hydrosystem.com

General Information
info@hydrosystem.com

Phone: 661-775-0686

Website: hydrosystem.com

CODES AND COMPLIANCES
Massachusetts code File no: P1-0614-491

ADA Compliant

All specifications and options subject to change without notice please contact a hydro systems representative for more information.

DESIGNER COLLECTION

RACHAEL
6636

Drop-In Cutout Install Dimensions:
- (L)ength - 64"
- (w)idth - 34"
- Finished Height - 19¼"

3-Wall Install Dimensions:
- (L)ength - 66"
- (w)idth - 36"
- Top of Ledger - 20¾"

STANDARD ACRYLIC COLORS
WHITE BISCUIT BONE

PREMIUM ACRYLIC COLORS
BLACK STERLING SILVER

WELLNESS OPTIONS

Cold Plunge
Revitalizing cold hydrotherapy into a traditional tub

Thermal Air
Tiny bubbles into the bathwater and offers untold relaxing benefits, similar to Swedish massage

Hydro Indulge
A concentrated dose of oxygen-rich molecules cleanse and restore skin

Whirlpool Massaging Jets
Flexibility to customize jet location, quantity of jets and type of jet therapy

Back and Neck Masseuse
Utilizes six strategically located jets enabling a "shiatsu" type massage and direct to the neck with 3 pulse settings

Advanced UV system
Ozone and UV light helps to disinfect the water and keep it clean

Chromatherapy
Digitally controlled, multicolored lighting feature LED lighting system

Hydro Fusion
Totally silent operation maintains ideal temperature without adding hot water constantly

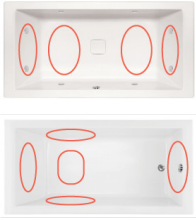

Hydro Blanket
Radiant heat emanates through the acrylic tub surface. Chose up to 2-5 panels..

OTHER OPTIONS
Additional options can be found on our website

Integral Waste and Overflow
Seamless built-in protection for bathtub (included)

Grab Bars
Adds functionality and enhanced styling. Affords a mounting solution in virtually any position on any tub.

Micromount
Reduces the standard edge profile of the tub to a nominal ½" for a sleek, modern look

Integral Tile Flange
Available on select non-oval tubs. Please specify which sides flange will need to be added to.

Skirt
Add as many skirts to most rectangular drop-in tubs to fit any application. Seamed or seamless, peninsula, corner, freestanding

Installation Tips:
- When adding integral linear drain p-trap location is now below waste
- Adding multiple systems/options may require equipment to stick out from tub deck or be installed remotely

HYDRO SYSTEMS
MADE IN THE U.S.A.

Headquarters
29132 Avenue Paine
Valencia, CA 91355

Manufacturing Facility
385 Highway 155 South
McDonough, GA 30253

Technical Support
support@hydrosystem.com

Orders Department
orders@hydrosystem.com

General Information
info@hydrosystem.com

Phone: 661-775-0686

Website: hydrosystem.com

CODES AND COMPLIANCES
Massachusetts code File no: P1-0614-491

ADA Compliant

All specifications and options subject to change without notice please contact a hydro systems representative for more information.