CRYSTAL 7844

STON COLLECTION

PVC Systems Include:

- 8 Fully directional adjustable flow PVC jets
- Anti-vortex safety suction
- Color matched system trim
- HydroOzone ozone sanitation system
- Rigid PVC piping
- Self draining pump and system
- Soft Touch electronic on/off control with 30-minute integral times
- 2.25 HP single speed pump
- Cable waste and overflow

Standard Grab Bar

Linear Integral Waste and Overflow

Chromatherapy-LED Lighting System

Options: (more information available on our website)

- Additional Jets
  - Directional or Swirling
- Back Masseuse Systems
- Cold Plunge
- Chromatherapy-LED Lighting System
- Custom Jet and Pump Location
- Electronic Low Water Protection
- Export Crate
- Grab Bars
  - Standard or Universal
- Hydro Coat
- Hydro Express
- Hydro Fusion
- Hydro Indulge
- HydrOzone UV System
- In-line Heater
- Integral Waste and Overflow
  - Round or Linear
- Jumbo Jets
  - Directional or Rotating
- Micro Mount
- Micro Therapy Jets
- Neck Masseuse Pillow
- Padded Headrest Pillow
- Remote Control System

Standard Electrical Requirements:

- Whirlpool System | One 20 Amp Dedicated Circuit
- Thermal Air System | One 15 Amp Dedicated Circuit
- Combo System | One 15 Amp Dedicated Circuit and One 20 Amp Dedicated Circuit
- Indulge System | One 15 Amp Dedicated Circuit
- Hydro Fusion (600 or 1500 Watts) | One 15 Amp Dedicated Circuit
- Inline Heater (600 or 1500 Watts) | One 15 Amp Dedicated Circuit

All electrical components come standard at 115 volts

All electrical circuits must be GFCI protected

HYDRO SYSTEMS
Family Owned And Operated Since 1978

29132 Avenue Paine. Valencia, CA, 91355
661.775.0686 | hydrosystem.com

CRYSTAL 7844

STON COLLECTION

HS

As Shown:

Whirlpool option

Features Shown:

- Overflow location
- Standard jet location

Also Available:

- Soaking tub only
- Thermal Air
- Combo

Backslope:

XX degrees

Water Capacity:

110 Gallons

Weight:

175-225 Pounds depending on system

Drop-In Installation Dimensions:

- (L)ength- 76″
- (W)idth- 42″
- (H)eight- 18″

Installation Tips:

- When adding integral linear drain p-trap location is now below waste
- Adding multiple systems/options may require equipment to stick out from tub deck or be installed remotely

Hydroluxe SS Tub

- Hydroluxe SS model finished in 1-2″ thick solid surface material
- Pre-wired pump on pump platform (standard pump location only)
- Integral E-Z level platform facilitates installation
- Micro mount reduces standard edge height of tub to minus (-) 3/8 to 5/8″
- Micro mount requires increase in framing height by an additional 1-1/4″

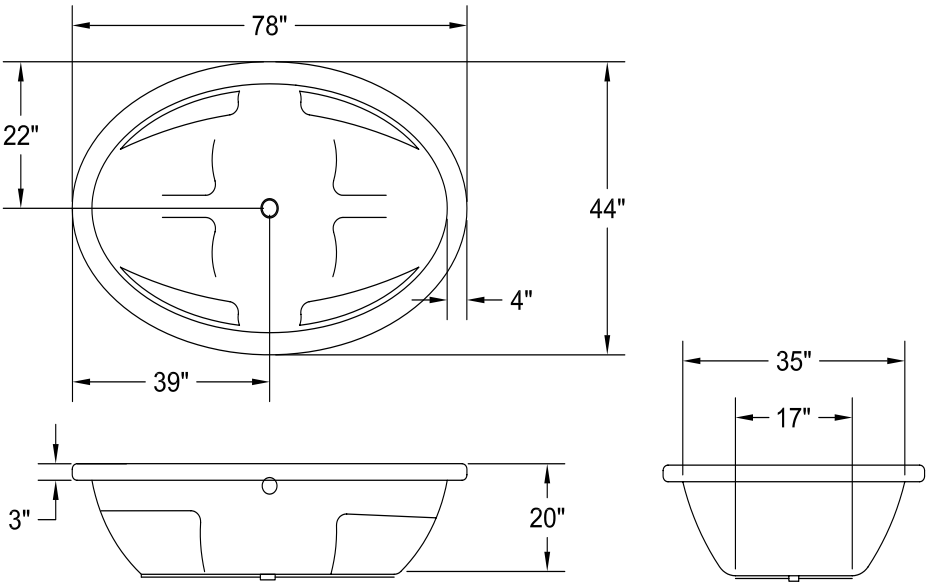

CODES AND COMPLIANCES

Massachusetts code File no: P1-0614-491

Allspecificationsandoptionssubjecttochangewithoutnoticeplease contactaHydroSystemsrepresentativeformoreinformation. Certainoptionsoralteringthepump/blowerlocationmaycause thepump/blowertoextendbeyondthetubdecking.Forcutout dimensionswaitforunittoarrive.Allspecificationssubjecttochange without notice.