H|S HYDRO SYSTEMS

Hydro Chill Ultra Cold Plunge / Hot Soak System

INSTALLATION GUIDE

Table of Contents

Overview of Hydro Chill Ultra Cold Plunge / Hot Soak System 2

Installation and Plumbing 3

Connection Guide 4

Operating the Unit with the Control Panel 5

Operating the Unit with the SmartLife Application 10

Error Messages and Solutions 11

UV and Ozone Settings 11

Caring for the Unit 11

Regular Maintenance 12

Warranty 13

Components 14

Overview of Hydro Chill Ultra Cold Plunge / Hot Soak System

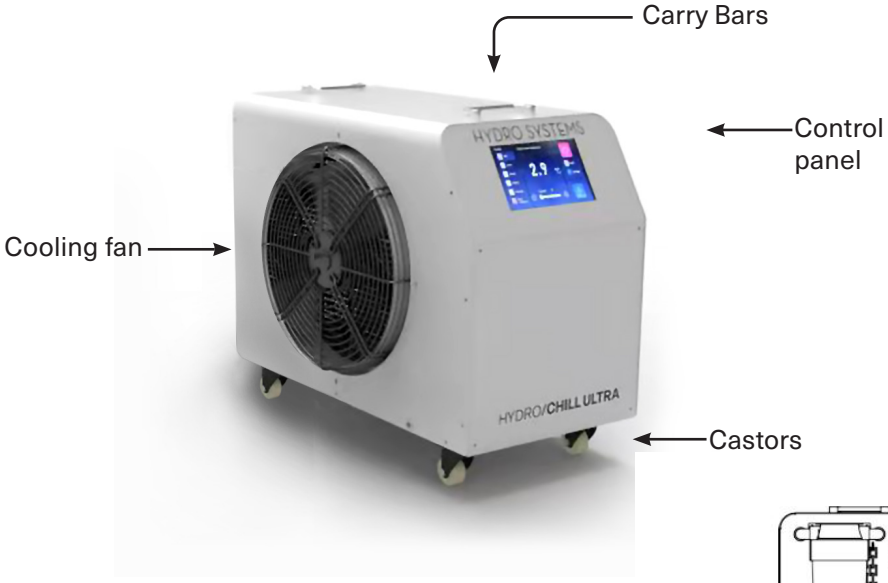

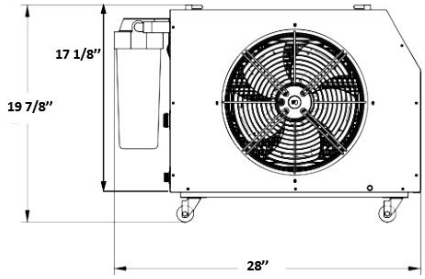

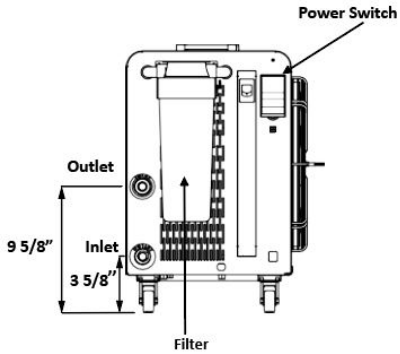

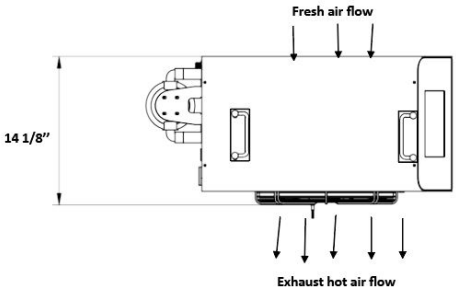

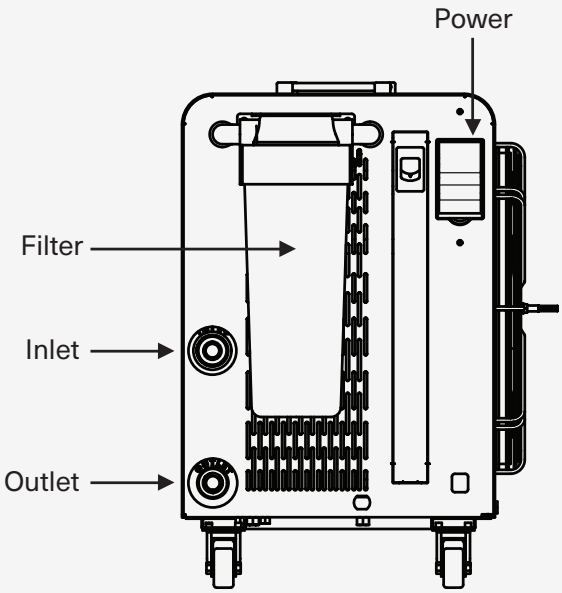

Hydro Chill Ultra Specifications

- Power supply: 110~120v 50/60Hz
- Input: 1250W
- Cooling capacity: 3180W
- Heating capacity: 3720W
- Working ambient temperature: 36–104 ºF
- Refrigerant: R410A
- Circulating pump: Built-in self-priming pump, 12–20 L/min
- UV ozone
- Remote control: via iOS/Android app, WiFi
- Running Noise: 52dB
- Plumbing connections included: slip x threaded couplings, slip x slip unions, 90º elbow fittings

Installation and Plumbing

1. Your bathtub comes pre-plumbed and ready for easy connection to the Hydro Chill Ultra unit.
2. The Hydro Chill Ultra unit must be installed on a flat surface that is level with the tub and with the intake pipes coming out of the tub to prevent air locks in the waterline. It cannot be placed in a crawl space or basement.
3. Due to ventilation requirements and heat produced, you must leave proper room for ventilation. If you choose to install outside, you must place the chiller inside a suitable structure that will protect it from direct sunlight and precipitation, while still allowing for proper ventilation. For reference, a suitable structure can be 40”(l) x 28”(w) x 30”(h). Leave at least 7.5” of space in front of the fan and at least 6” of space around the other sides of the chiller. Place a suitable partition board to prevent the hot air from the fan reaching the air inlet holes of the chiller. Ensure all air inlet and outlet vents are not blocked or covered.
4. Ensure the air exiting the fan follows the same direction as the prevailing wind, especially when the chiller is installed outdoors.
5. For optimal performance we recommend placing the chiller no closer than 3 feet and no further than 6 feet from the bathtub. The further from the tub, the less efficient the chiller will be and the longer it will take to cool the water in the tub.
6. Place the Hydro Chill Ultra unit at approximately the same height as the bathtub’s suction pipe. Connect the intake pipe to the Hydro Chill Ultra’s inlet. Then connect the Hydro Chill Ultra’s outlet to the bathtub’s return port.
7. The unit must be installed with a dedicated 120-volt 20-amp GFCI receptacle.
8. Connect the plumbing from the bathtub to the chiller following the steps outlined on page 4.
9. Once all the connections are made and the bathtub is filled with water, please use the control panel on the unit to set the unit to your desired temperature.

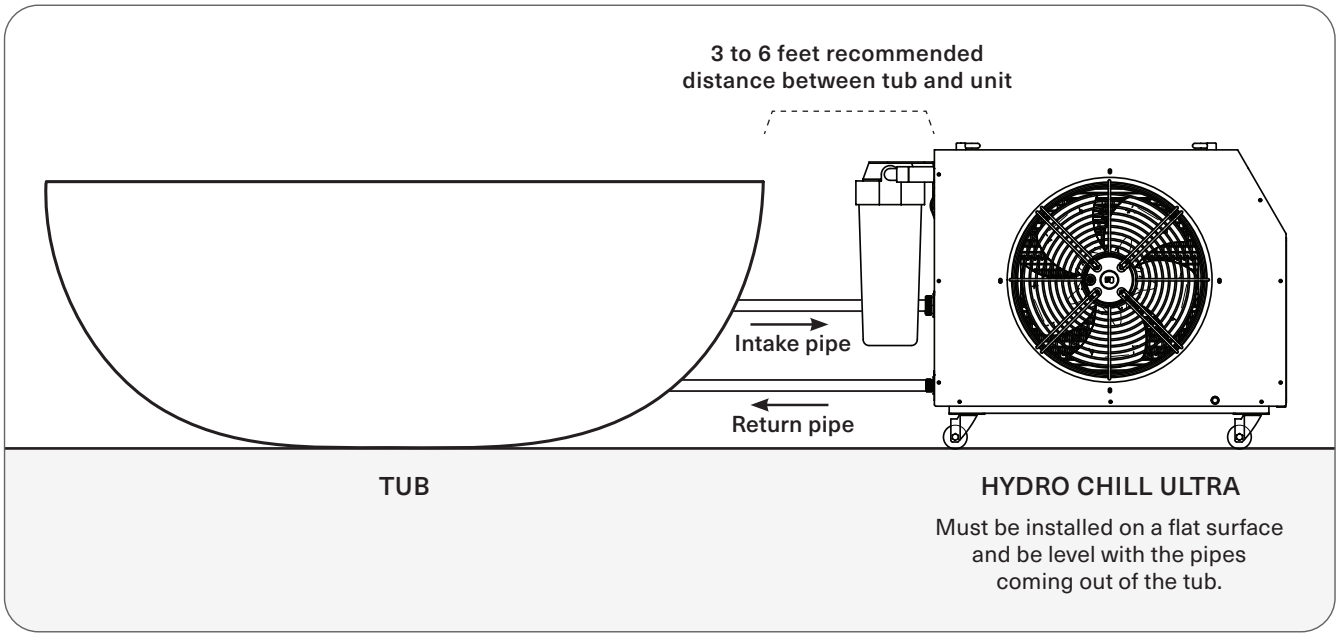

Connection Guide

Parts (included)

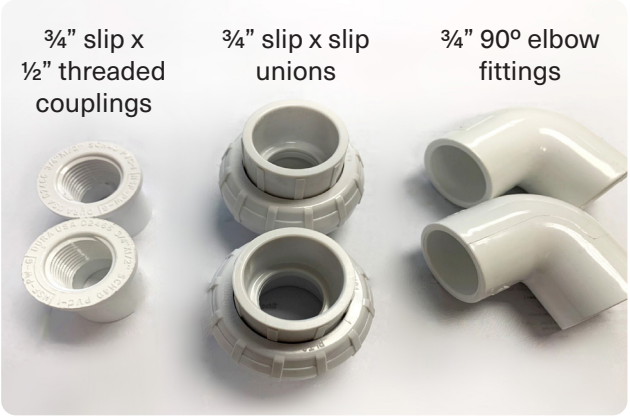

Step 1: Apply Teflon tape to each port.

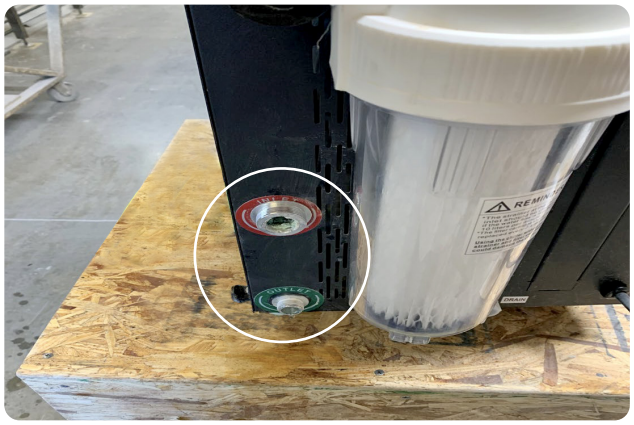

Step 2: Install the filter screen (included with your system) into the inlet. Make sure it has the gasket.

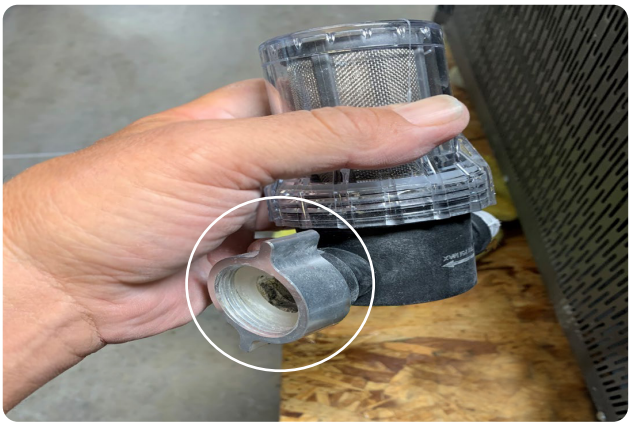

Step 3: Thread in the filter screen into the inlet.

Step 4: Glue in the ¾” slip x slip unions. These can be used for a direct connection to the ¾” pipes coming from the bathtub.

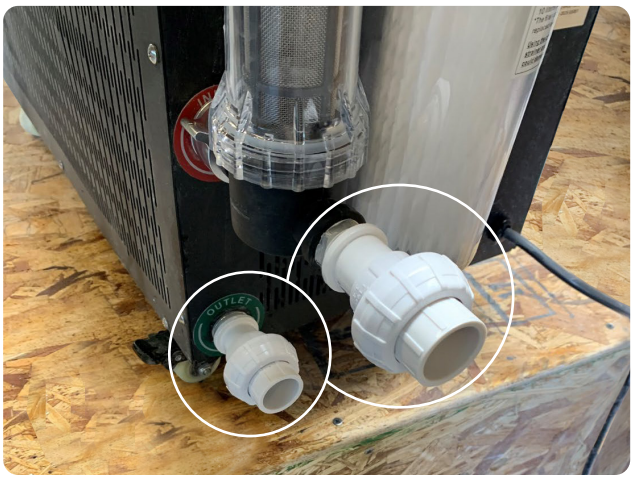

Step 5: If needed, glue in the ¾” 90º elbow fittings, which connect the chiller to the bathtub when it’s placed on either side of the chiller.

Operating the Unit with the Control Panel

The unit can be operated via the **control panel**—a 6.5-inch touchscreen found on the exterior of the unit.

CONTROL PANEL

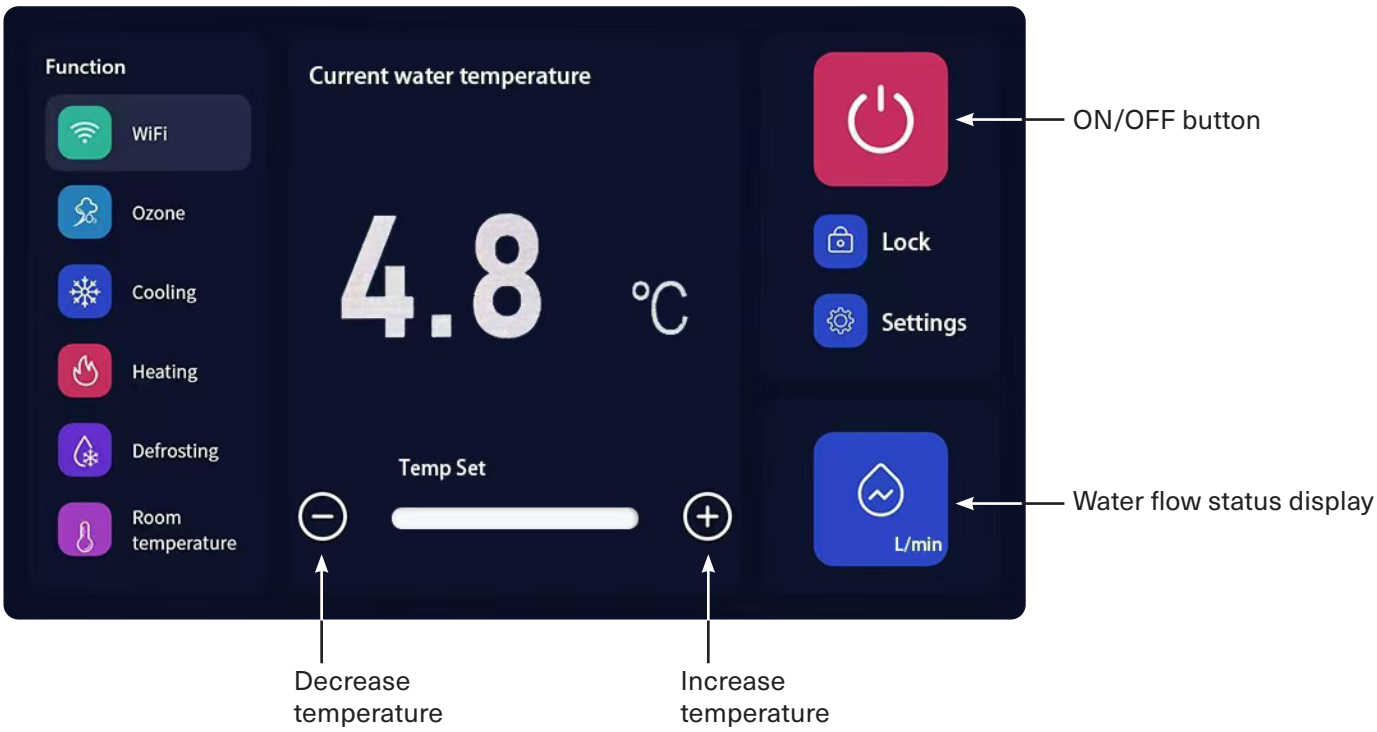

Turning the unit on and off

Press the ON/OFF button to turn the unit on or off. The button will turn red when the unit is turned on, and gray when the unit is turned off.

When the unit is turned on, the following systems will start to function:

- Compressor
- Fan
- Four-way valve
- Ozone
- Vacuum pump
- Water pump (one by one)

WiFi
When WiFi is connected, you are able to operate the unit using the SmartLife App.
When WiFi is not connected, you can still operate the unit using the control panel.

Ozone
Indicates the Ozone operation status.

Cooling
Indicates whether cooling is ON or OFF.

Heating
Indicates whether heating is ON or OFF.

Defrosting
Indicates the defrosting status and whether it is operating normally.

Room Temperature
Indicates the room temperature of your environment.

Adjusting Water Temperature
Press the MINUS sign to decrease water temperature.
Press the PLUS sign to increase water temperature.

Water flow status display
Indicates the water flow speed.

Unlocking and locking settings

- To unlock settings: Press and hold the LOCK button for about 5-7 seconds. It will turn blue when unlocked.
- To lock settings: Press and hold the LOCK button for about 5-7 seconds. It will turn gray when locked.

SETTINGS

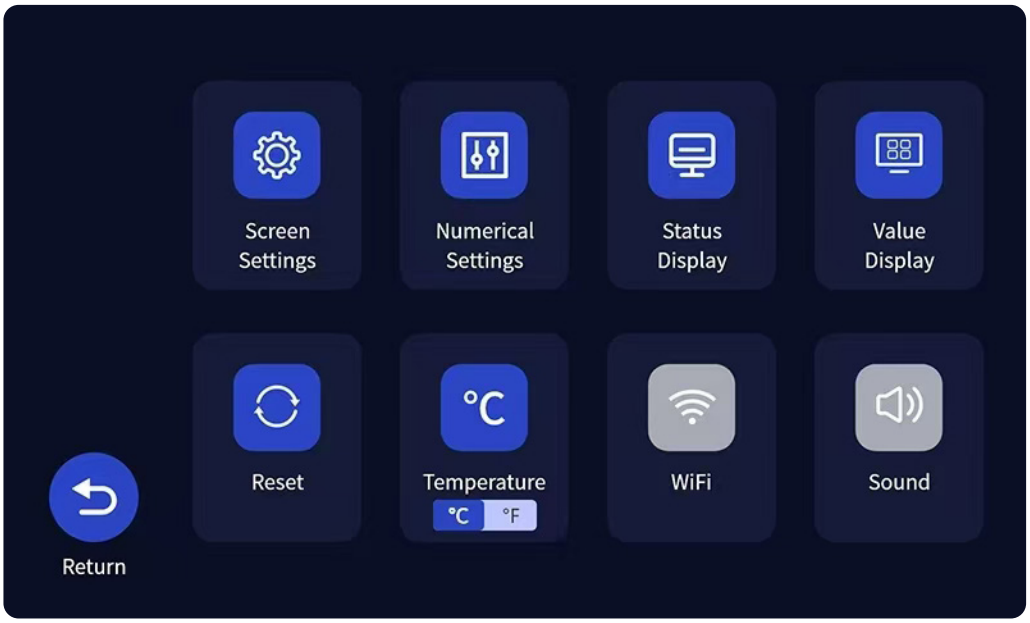

After clicking the SETTINGS button, a menu will be displayed with 8 options:

1. **Screen Settings**
   Press to adjust the screen's brightness, sleep time, and lock time.

2. **Numerical Settings**
   Press to set the temperature deviation values, temperature correction, and frosting/defrosting times.

3. **Status Display**
   Press to view the status of the compressor, fan, water flow switch, water pump, Ozone, and four-way valve.

4. **Value Display**
   Press to view the water temperature, room temperature, and defrosting temperature, as well as the water flow value.

5. **Reset**
   Press to restore the parameter indicators to their default settings.

6. **Temperature**
   Press to switch between Fahrenheit and Celsius.

7. **WiFi**
   Press to turn WiFi on or off.

8. **Sound**
   Press to turn the alarm sound on or off.

1. Screen Settings

Adjust the screen's:

- Brightness
- Sleep time
- Lock time

2. Numerical Settings

Set the following values:

- Upper deviation temperature
- Lower deviation temperature
- Temperature correction
- Defrosting time
- Frosting time

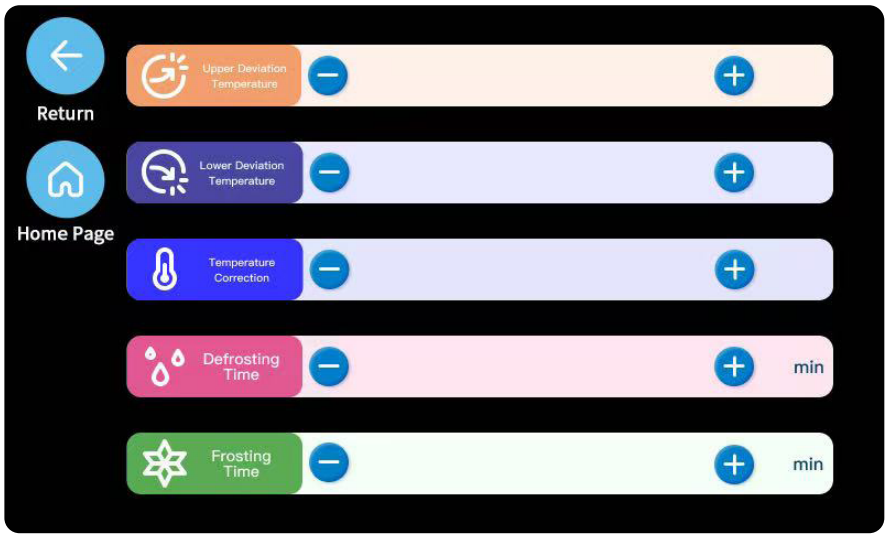

3. Status Display

View the status of:

- Vacuum pump
- Water flow switch
- Water pump
- Fan
- Compressor
- 4-way valve
- Ozone

Icons appear gray when functions have not started, and colored when functions have started.

4. Value display

View the values of:

- T1: Water temperature
- T2: Room temperature
- T3: Defrosting temperature
- Water flow

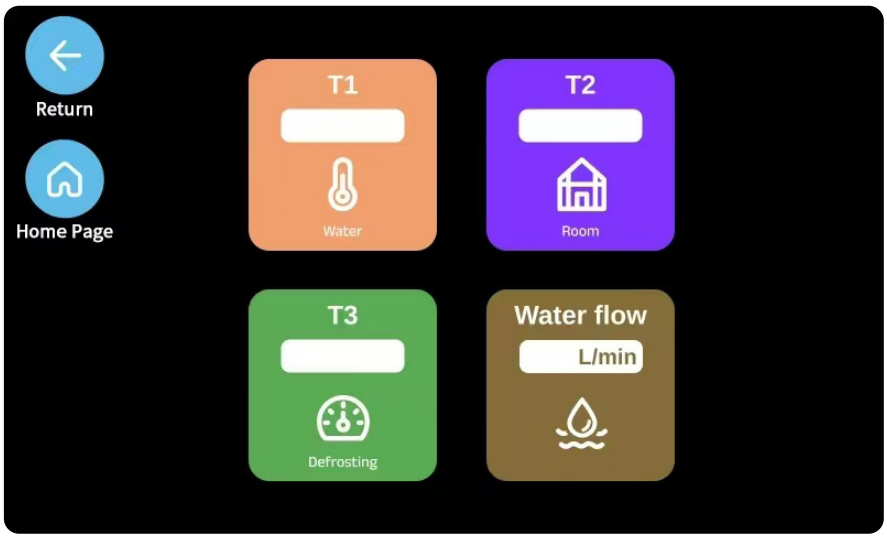

Operating the Unit with the SmartLife Application

Downloading and connecting the app

1. Download the *"SmartLife"* application. Log in to your account or create a new account.
2. When connecting the app for the first time, first make sure that the device is in the distribution network state. Long press "WiFi" under the main menu interface for 5 seconds until the WiFi flashes to find the network state. Display three states of app networking (*off, distribution, successful*).
3. Please make sure that your device handles "WiFi distribution status", your phone is connected to a nearby WiFi, and turn on the Bluetooth function of your phone. Then open the "+" sign in the upper right corner to add the device, enter the WiFi password and click "next" until the addition is complete.

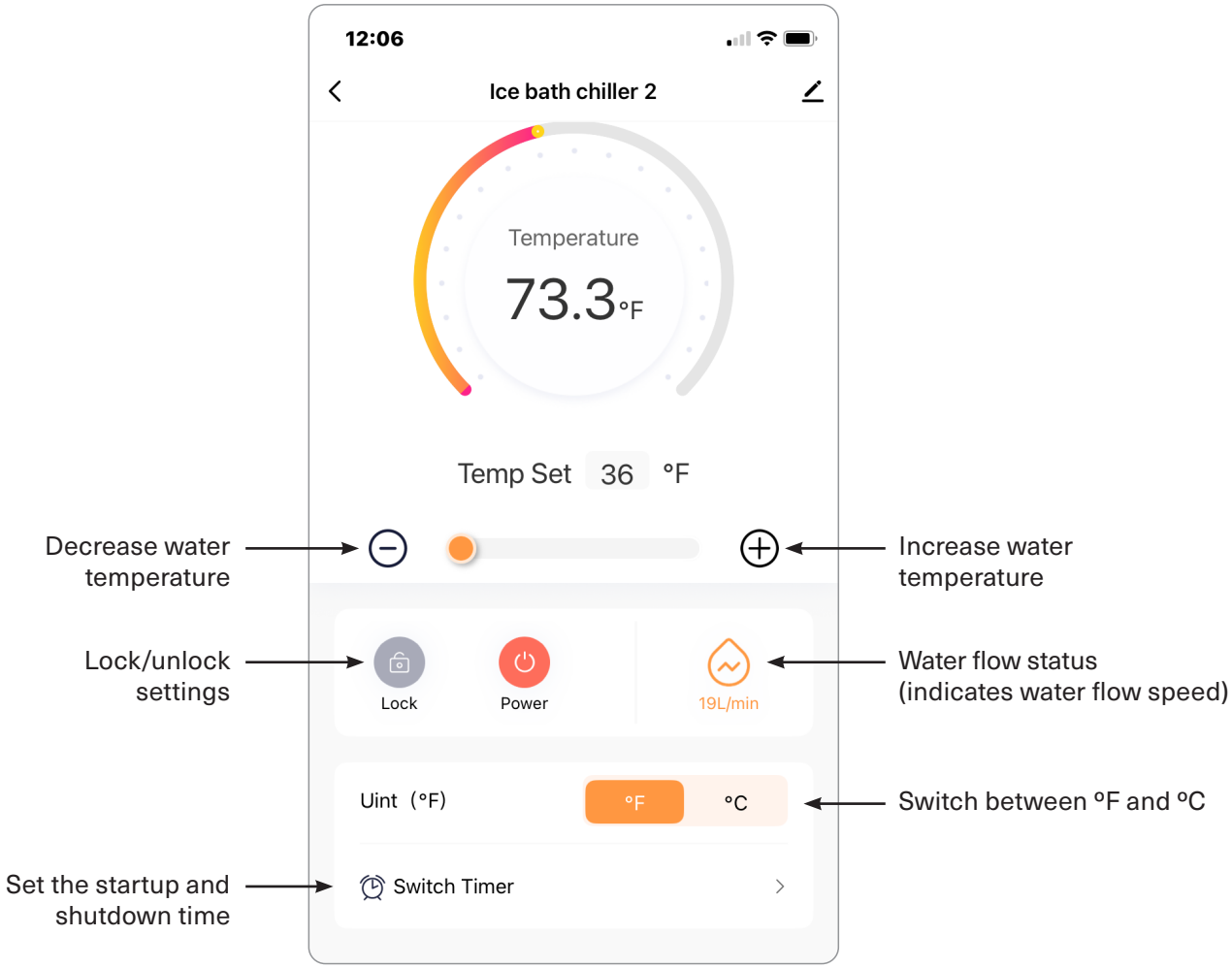

Error Messages and Solutions

Error messages will be displayed in the control panel.

ERROR MESSAGE	ACTION TO TAKE
T1 temperature sensor failure	Please contact Hydro Systems technical support
T2 temperature sensor failure	Please contact Hydro Systems technical support
T3 temperature sensor failure	Please contact Hydro Systems technical support

UV and Ozone Settings

Users don't need to adjust the UV and Ozone settings if the unit is working well.

Caring for the Unit

How to make your unit operate more efficiently and have a longer lifespan?
The following tips can help make your unit more durable.

Protecting the unit:

- If placing the unit outside, please place it under a canopy or shelter to protect it from the harmful effects of the sun, rain, and snow.
- Never put the unit outside in temperatures below 34ºF when it has water inside.

Water quality:

- Water should be clean, not polluted, of low chloride ion content.
- Pollutants such as sulfuric acid and sulfur oxides increase chlorine corrosion.
- The water's PH value sould be between 7 and 9. A higher PH value may lead to scaling, even corrosion.

Cleaning:

- Always disconnect the unit from the power supply before any maintenance or cleaning.
- Never clean the unit with strong bleach-based detergents.
- Do not put corrosive disinfectants into the water, such as chlorine tablets.
- Don't spray water directly on the unit.
- Please use a clean, soft cloth to clean the surface of the unit.

Regular Maintenance

Regular maintenance and cleaning are necessary to remove any contaminants that the unit and the water may have accumulated during usage.

Using the unit without the mesh filter and cartridge filter will damage the unit.

Drain outlet:

In the following situations, it is necessary to open the drain outlet and empty the water inside the unit:

- The machine is not used for a long time (to prevent the deterioration of the water inside).
- The ambient temperature is below 34°F (to prevent water from freezing and damaging the internal pipelines)

Changing the cartridge filter:

Please change the cartridge filter regularly. When the filter is dirty, the water flow is reduced (you may see a *"water flow failure"* message on the control panel). Replacing the filter ensures a normal water flow rate and optimal performance. To protect the unit, please buy the correct cartridge filter from Hydro Systems or your local supplier. Please follow these steps to change the filter:

- Make sure bathtub is drained of water and unit is turned off
- Open the lid with a wrench
- Take out the filter
- Put in a new filter
- Close the lid and tighten with wrench

Cleaning the mesh filter:

Please wash and clean the mesh filter when water flow is reduced by 30% or cold condensation appears. We recommend cleaning it every four weeks to ensure an optimal performance of the water pump. Please follow these steps to clean the filter:

- Make sure bathtub is drained of water and unit is turned off
- Open the lid with a wrench
- Take out the mesh filter and rinse it with water
- Put back the clean mesh filter
- Close the lid and tighten with wrench

Hydro Chill Ultra Cold Plunge / Hot Soak System 1-Year Limited Warranty

This limited warranty on the Hydro Chill Ultra Cold Plunge / Hot Soak System is extended to the first user or the original retail purchaser for a period of twelve (12) months from purchase. This limited warranty is not enforceable by any other party.

HYDRO SYSTEMS, INC. warrants that the system is free from defects in the workmanship and/or materials. This limited warranty does not include any other items not manufactured by HYDRO SYSTEMS.

No dealer or other person has any authority to make any warranties or representations concerning HYDRO SYSTEMS, INC. or its products. Accordingly, HYDRO SYSTEMS, INC. is not responsible for any such warranties or representations.

Components

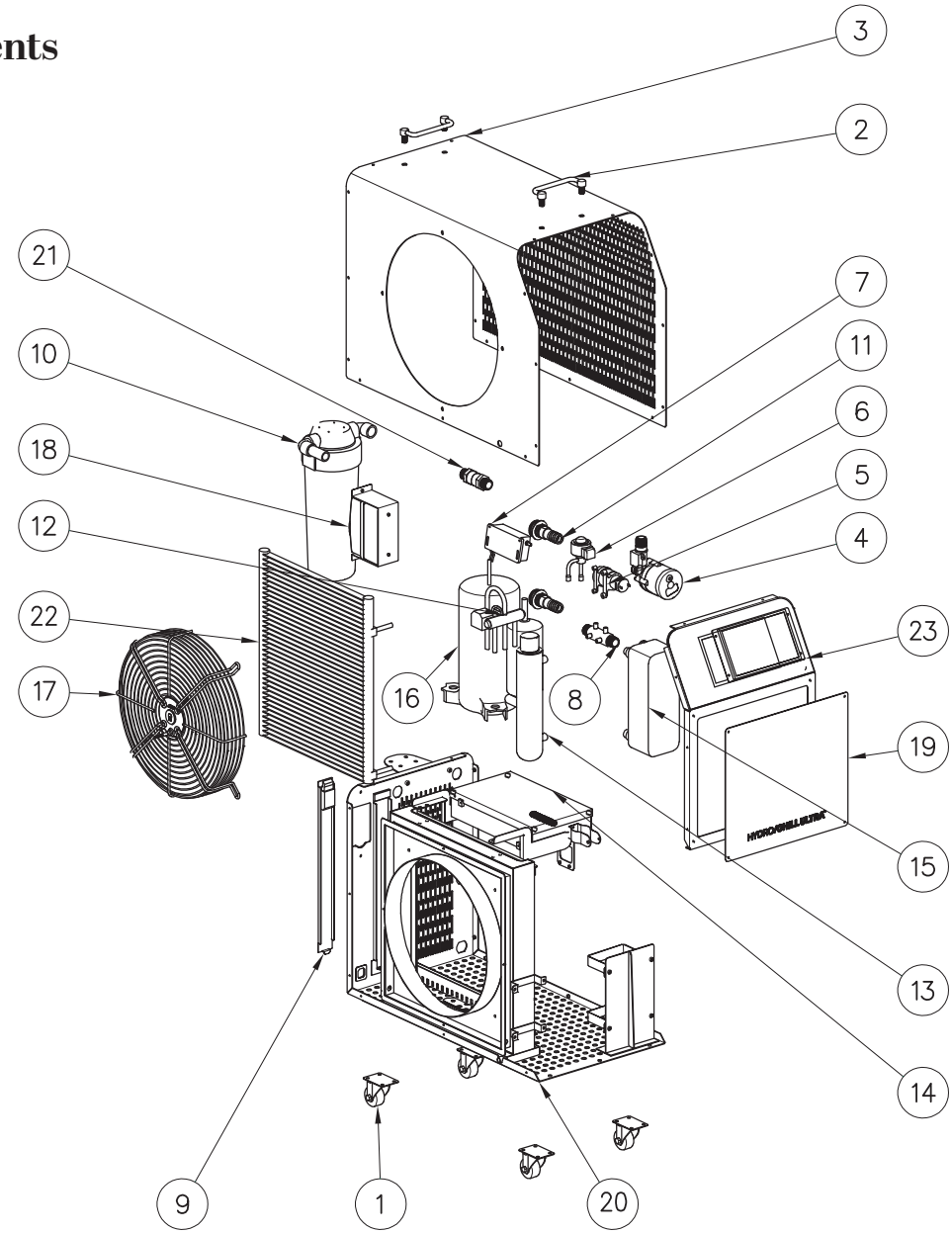

1. 1.5-inch casters
2. Handle
3. Top cover
4. Water pump
5. Vacuum priming pump
6. Electronic expansion valve
7. Ozonator
8. Water knockout drum (aluminum)
9. Small cover plate (detachable)
10. 10-inch filter
11. CNC customized water outlet (aluminum)
12. Four-way valve
13. UV disinfection tube
14. Electrical box
15. Plate type heat exchanger
16. Compressor
17. 300 axial flow fan
18. Leakage protector
19. Front cover
20. Base sheet metal
21. Flowmeter
22. Condenser
23. Touch screen (control panel)